更改 REV	說明 MODIFICATION
A	EC06856

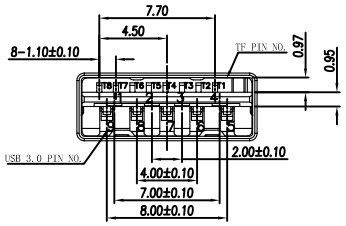

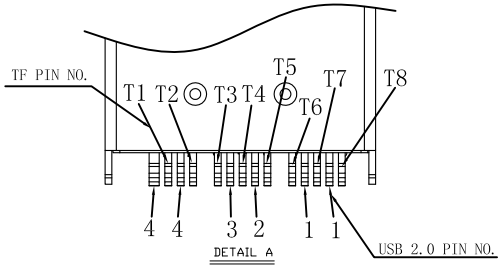

DETAIL A
SCALE 1.5:1

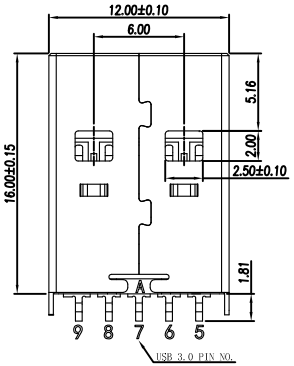

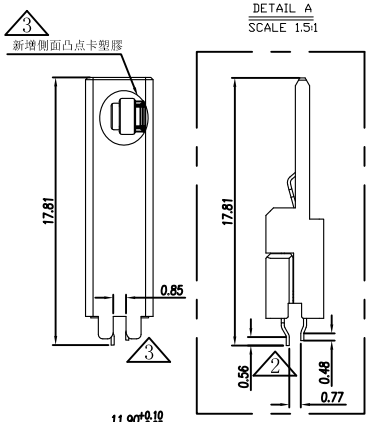

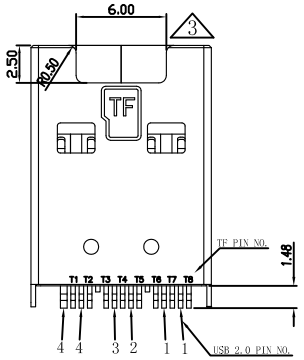

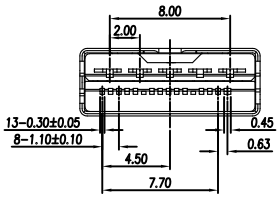

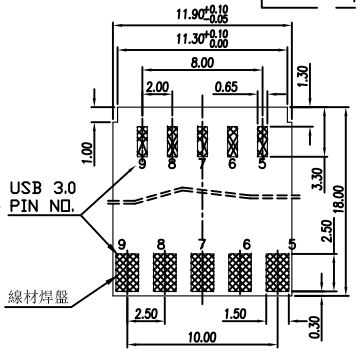

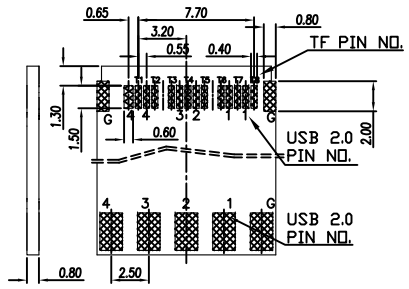

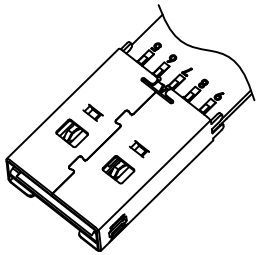

Specification:

1. Electrical Characteristics:
   - Contact Current Rating: 1.0 A
   - Dielectric Withstanding Voltage:AC 100V.
   - Insulation Resistance:100 MΩ Min.
   - Contact Resistance:
     - 30 mΩ (Max) initial for VBUS and GND contacts.
     - 50 mΩ (Max) initial for all orther contacts.
2. Mechanical Characteristics:
   - Insertion Force: 35N(3.57Kgf) MAX
   - Extraction Force: 10N(1.02Kgf) Min
3. Material & Plating:
   - Terminal: Phosphor Bronze
   - Under Plating: 1.25um Nickel (All Area)
   - Solder Area Plating: SEE NOTES
   - Shell: SPCC
   - Shell Plating: NI
   - Housing: LCP

Pin NO.	Signal Name
T1	DAT2
T2	CD/DAT3
T3	CMD
T4	VDD
T5	CLK
T6	VSS
T7	DAT0
T8	DAT1

TF PIN NO.

Pin NO.	Signal Name	Pin NO.	Signal Name
1	VBUS	5	SSRX-
2	D-	6	SSRX+
3	D+	7	GND
4	GND	8	SSTX-
G	Shield	9	SSTX+

USB 3.0 PIN NO.

GENERIAL TOLERANCE	
X.± 0.50	X.°± 5°
.X± 0.30	.X°± 2°
.XX± 0.20	.XX°± 1°

KINGCONN 皇海科技股份有限公司

名稱(TITLE) USB 3.0 +TF卡 外置TF

單位(UNIT)	料號(PART NO.)	圖號(DWG NO.)
mm	7USBT-FA-0314	7USBT-FA-0314-B

審核(APPROVAL) 核對(CHECKED) 製圖(DRAWN)

比例 SCALE 1:1 張數 SHEET 1/1

專案 PROJ. 更改 REV B

RoHS

QP-701-03-R